Queen Mary
University of London
Science and Engineering

EBU4202: Digital Circuit Design

Logic Signals

Dr. Md Hasanuzzaman Sagor (Hasan)
Dr. Chao Shu (Chao)
Dr. Farha Lakhani (Farha)
Dr. Fatma Benkhelifa

School of Electronic Engineering and Computer Science,
Queen Mary University of London,
London, United Kingdom.

Overview: Digital Circuits

* **Logic Signals**
* **IC Fabrication** → **Self-study topic (not assessed)**
* **CMOS Logic**

Chapters 1 & 3 – "Digital Design: Principles and Practices" book

***Note**: Some pictures in this topic were extracted from the web.*

Logic Signals & Gates

- Logical signals are often called *low* and *high*, to refer to the values *0* and *1* (not necessarily in this order!).

- Also, *low* often corresponds to algebraically lower voltages while *high* corresponds to higher voltages (Low can mean "inactive", High can mean "active").

The most natural type.

- Types of logic:
  - *Positive Logic* assigns *0* to *low* and *1* to *high*.
  - *Negative Logic* assigns *0* to *high* and *1* to *low*.

Not often used
(we will not discuss this in this module)

Logic Levels

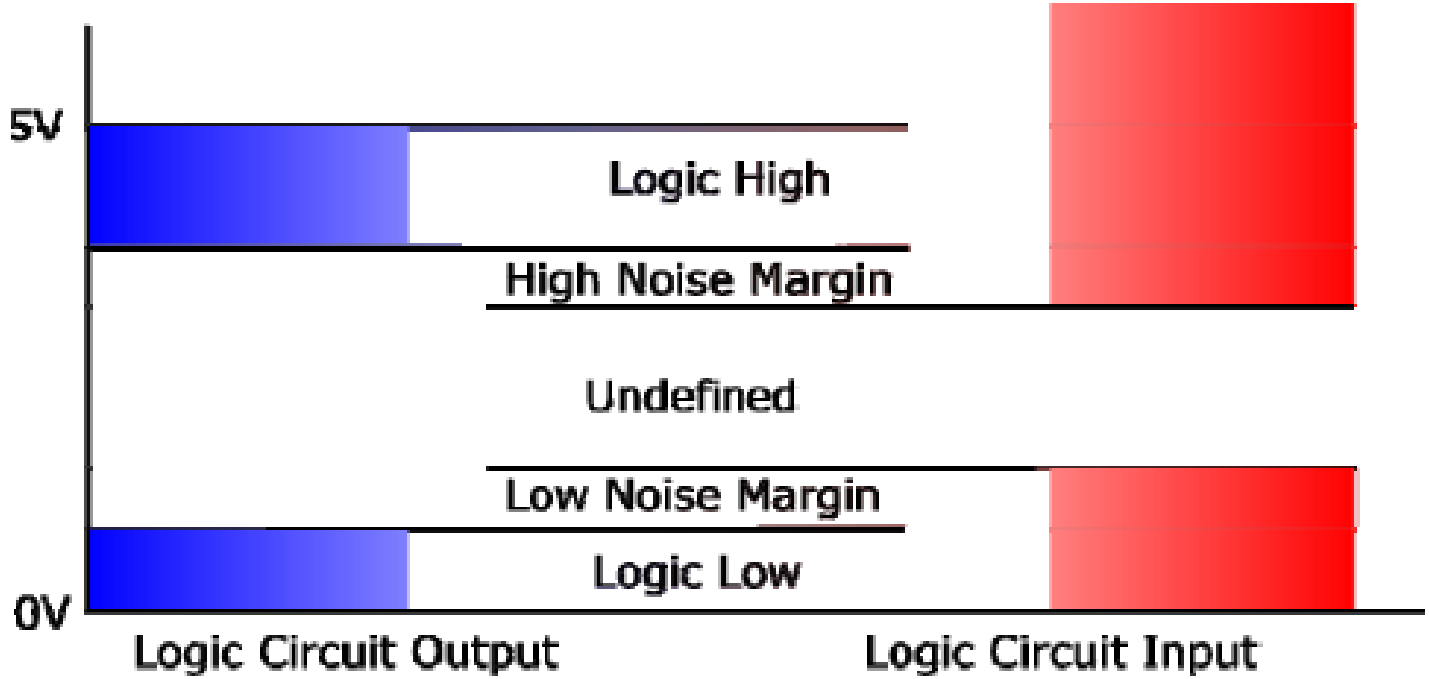

- *Different logic families* may have different logic levels.
- Noise Margin: *maximum external noise voltage* that can be added to an input signal *without causing an undesirable change in the circuit output*.

- NOTE: If we use TTL gates, then the NOISE IMMUNITY is greater if we use NEGATIVE LOGIC i.e. logic 1 is OFF/inactive.

CMOS Voltage Levels

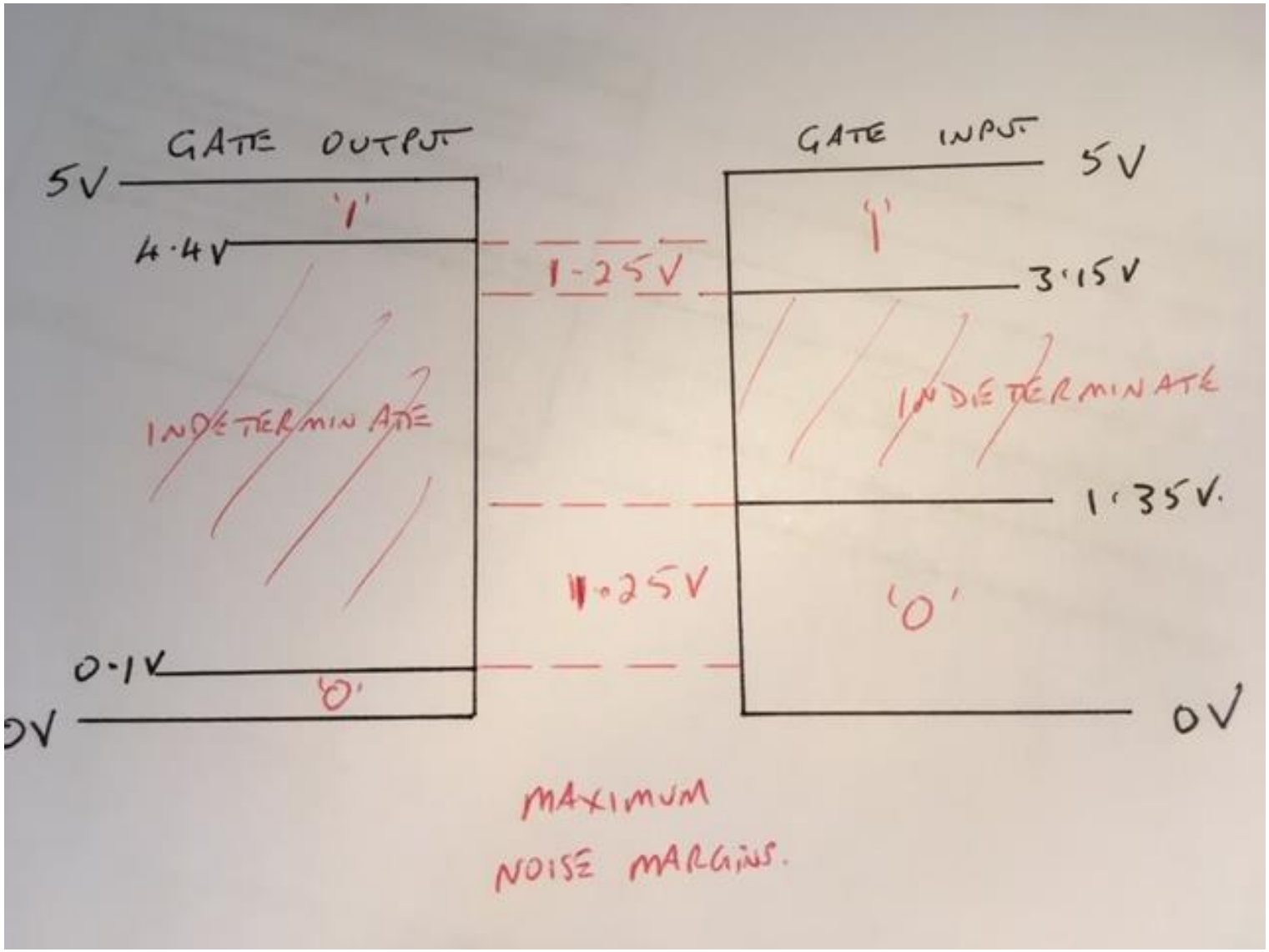

TTL Voltage Levels

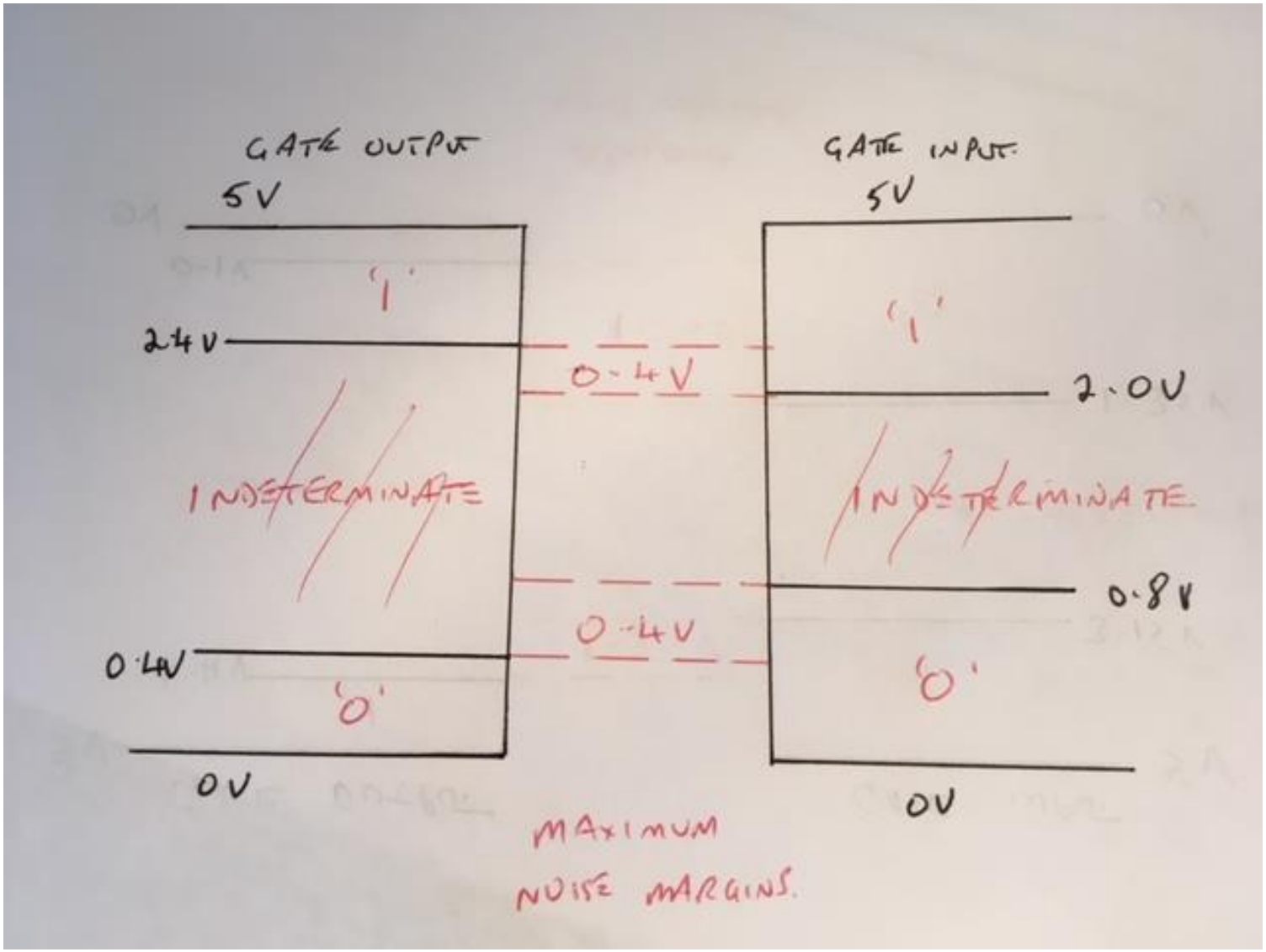

Fan-in & Fan-out: Definition

- ***Fanin*** refers to the number of inputs a gate can have in a particular logic family.
  - In other words, it's the number of inputs that a gate can practically have.

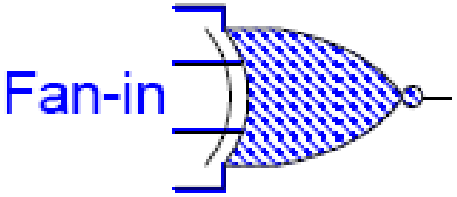

- ***Fanout*** refers to the maximum number of logic inputs that an output can drive reliably.
  - It depends not only on the *characteristics of the output*, but also depends on the *characteristics of the input*.

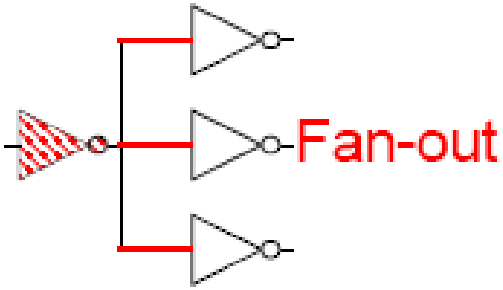

Fan-in & Fan-out: Characteristics

- **Fan-in**:
  - Too many inputs for a gate may lead to significant delay.
  - The number of inputs on most CMOS gates is limited to between *4* and *6*.
  - Gates with a large number of inputs can be made faster and efficient by cascading gates with fewer inputs.

- **Fan-out**:
  - If too much fanout is connected to an output, the DC noise margin may not be adequate and there may be incorrect logic operation.
  - Fan-out may also affect speed.

Example: Data Sheet

Note: Taken from course textbook (page 98).

Table 3-3 Manufacturer's data sheet for a typical CMOS device, a 54/74HC00 quad NAND gate.

DC ELECTRICAL CHARACTERISTICS OVER OPERATING RANGE

The following conditions apply unless otherwise specified:

Commercial: $T_A = -40°C$ to $+85°C$, $V_{CC} = 5.0V \pm 5\%$; Military: $T_A = -55°C$ to $+125°C$, $V_{CC} = 5.0\ V \pm 10\%$

Sym.	Parameter	Test Conditions[1]		Min.	Typ.[2]	Max.	Unit
V_{IH}	Input HIGH level	Guaranteed logic HIGH level		3.15	—	—	V
V_{IL}	Input LOW level	Guaranteed logic LOW level		—	—	1.35	V
I_{IH}	Input HIGH current	V_{CC} = Max., $V_I = V_{CC}$		—	—	1	μA
I_{IL}	Input LOW current	V_{CC} = Max., $V_I = 0$ V		—	—	−1	μA
V_{IK}	Clamp diode voltage	V_{CC} = Min., $I_N = -18$ mA		—	−0.7	−1.2	V
I_{IOS}	Short-circuit current	V_{CC} = Max.,[3] V_O = GND		—	—	−35	mA
V_{OH}	Output HIGH voltage	V_{CC} = Min., $V_{IN} = V_{IL}$	$I_{OH} = -20$ μA	4.4	4.499	—	V
			$I_{OH} = -4$ mA	3.84	4.3	—	V
V_{OL}	Output LOW voltage	V_{CC} = Min. $V_{IN} = V_{IH}$	$I_{OL} = 20$ μA	—	.001	0.1	V
			$I_{OL} = 4$ mA		0.17	0.33	
I_{CC}	Quiescent power supply current	V_{CC} = Max. V_{IN} = GND or V_{CC}, $I_O = 0$		—	2	10	μA

Overview: Digital Circuits

* **Logic Signals**
* **Logic Families**
* **IC Fabrication** → **Self-study topic**
* **CMOS Logic**

Chapters 1 & 3 – "Digital Design: Principles and Practices" book

ICs: back to basics

- **Integrated Circuits** (ICs) are made of silicon, which in turn is created from sand. However, the manufacturing process of ICs is extremely complex and expensive.

Silicon and ICs

- ***Silicon*** is a semiconductor. This means that it can be altered to act as either a conductor, allowing electricity to flow, or as an insulator preventing the flow of electricity.
- This is done by DOPING the pure silicon with *trivalent* and *pentavalent* elements to make P-type and N-type silicon and hence PN junctions and transistors. These are then combined on the silicon wafer to make gates and INTEGRATED CIRCUITS.

- **Silicon chips**:
  - have a surface area of similar dimensions to a thumb nail (or even smaller);
  - are 3-dimensional structures composed of microscopically thin layers (perhaps as many as 20) of insulating and conducting material on top of the silicon.

Silicon Ingots: Definition

- Semiconductor devices are produced from *silicon ingots*.
- ***Silicon ingots*** is the name given to silicon in a single crystal form.
- ***Ingots*** are produced in a number of ways, but essentially, high purity silicon is melted down and then formed into ***cylindrical rods*** as shown below.

Silicon ingots are made to the customer's specifications (usual diameter ~15-20cm, but may be much larger due to improvements in manufacturing techniques).

Wafers *versus* Silicon Ingots

- **Rods** (or *silicon ingots*) are sliced into very thin *wafers*, using special diamond cutting technology.
- **Wafers**:
  - are treated (i.e., polished and chemically treated) to remove any roughness and/or damage;
  - are very thin (usually only *0.06mm* in width).
- **ICs** are built from the *wafers*.

Silicon ingot and the *wafers* that are cut from the ingot.

Creating ICs on Wafers

- Wafers are divided up so that many chips can be printed on them.

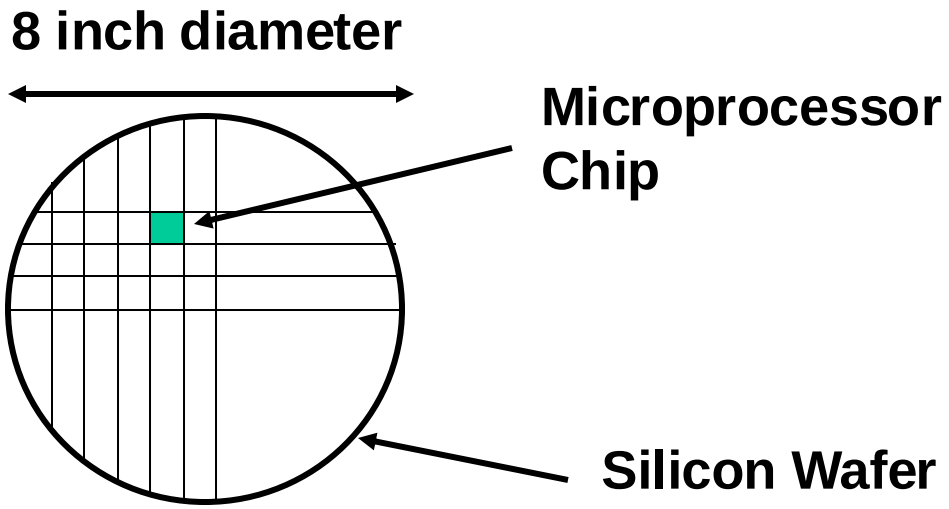

Finished wafers.

- How are all connectors, resistors, transistors and capacitors added to the wafer to make up an IC?
  - New (very thin) layers are embedded in, or added to, the original wafer.
  - Each additional layer defines more and more of the completed IC.

The Die

- **Wafers** *versus* **chips**: One wafer can yield hundreds of finished chips, that are cut individually using a diamond saw.
- **Die**: The industry term for individual chips.
- ***Die size*** varies depending on the chip:
  - The larger the individual chip's die size, the greater the waste of silicon area when a fault arises on a chip.
  - ***Example***: If a wafer is divided to make 40 chips and 10 random faults occur, then there'll be a wastage of 25%. ***But*** if the wafer is divided to make 200 chips and 10 random faults occur, then wastage will be only 5%.

Wafer Yield

- **Yield of the wafer**: The percentage of functioning chips.
- Yields vary substantially depending on:
  - complexity of the device being produced;
  - feature size used.
- **Acceptable yield values**:
  - any yield value of 50% is reported;
  - yield values of 80% to 90% are regarded as very good.

Producing good yield values is important, since a single short circuit, caused by two wires touching in a *30+ million* transistor chip, is enough to cause chip failure!

Feature Size

- **Feature Size**: Refers to the size of a transistor or to the width of the wires connecting transistors on the chip. ***Examples***:
  - One micron (i.e., 1/1000 of a millimetre) ***used to be*** a common feature size.
  - State of the art chips are now using sub-micron feature sizes between 0.25 (in 1997) to 0.13 (in 2001) (i.e., between 250 and 130 nanometres).

The smaller the feature size, the more transistors there are available on a given chip area.

A million nanometers

The pinhead sized patch of this thumb is a million nanometers across.

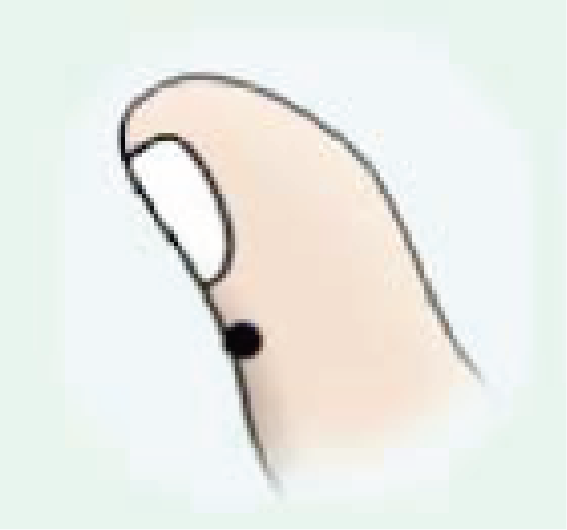

Smaller Feature Size (1/2)

- **Advantages**:
  - A greater number of transistors per die means a smaller die size, and this means more chips per wafer.
  - A microprocessor using a smaller feature size than its predecessor will be smaller, run faster and use less power.
  - Since more of these smaller chips can be obtained from a single wafer, each chip will cost less (this is one of the reasons for cheaper processor chips).
  - A reduced feature size makes it possible to build more complex microprocessors, e.g., the Pentium III which uses around 30 million transistors (now much superceded)……..
  - For example, Apple A13 processor (iPhone 11 Pro): 8.5 billion transistors

Smaller Feature Size (2/2)

- **Disadvantages**:
  - A reduced feature size means an increase in the density of transistors per chip area, and this has led to power consumption and power dissipation problems.
    - ***Example***:
      - CPUs typically dissipate about the same heat per square inch as an electric cooker generates (and sometimes require cooling fans or water cooling systems).
      - Increasing the speed (by reducing the propagation delay) increases the power dissipation.

Overview: Digital Circuits

* **Logic Signals**
* **Logic Families**
* **IC Fabrication**
* **CMOS Logic**

Chapters 1 & 3 – "Digital Design: Principles and Practices" book

CMOS Logic

- As seen before:
  - The **building blocks** in CMOS are MOS transistors.
  - CMOS operates from a *5* volts power supply (*usually!*).
- The ***Voltage-logic connection*** is interpreted as follows:

Typical **Logic levels** for CMOS logic circuits.

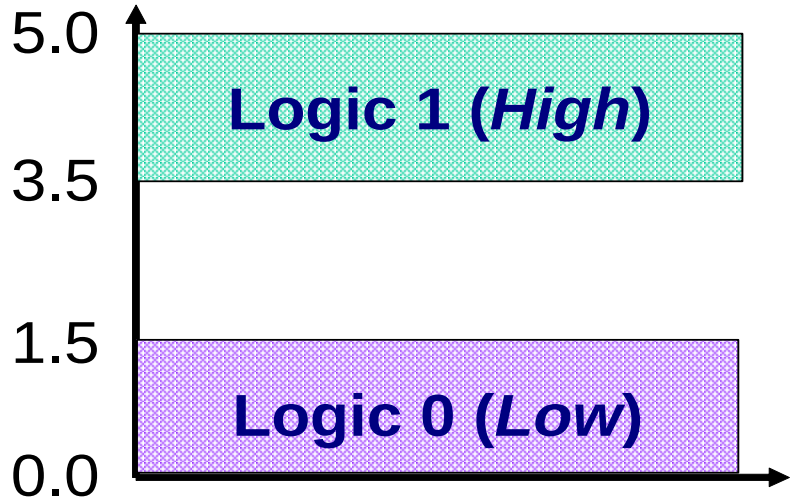

MOS Transistors

- **MOS transistor**: a 3-terminal device.
  - The voltage applied to one terminal controls the resistance between the remaining two terminals.
  - The **three terminals** are:
    - *Gate;*
    - *Source;*
    - *Drain.*

The ***names*** *refer to the type of semiconductor material* used for the resistance-controlled terminals.

- **Types of MOS transistors**:
  - *n-channel*
  - *p-channel*

N-Channel MOS (NMOS) Transistor

- ***Drain*** on NMOS: usually is at a *higher* voltage than the ***source***.
- **Notation**:
  - V_{gs} = voltage from ***gate*** to ***source***
  - R_{ds} = resistance from ***drain*** to ***source***
- **How it works**:
  - $V_{gs} \geq 0$ (usually).
  - If $V_{gs} = 0$, then R_{ds} will be very high (so, *no output*).
  - If voltage on the ***gate*** is increased (i.e., increase on V_{gs}), then R_{ds} decreases (so, *there is an output*).

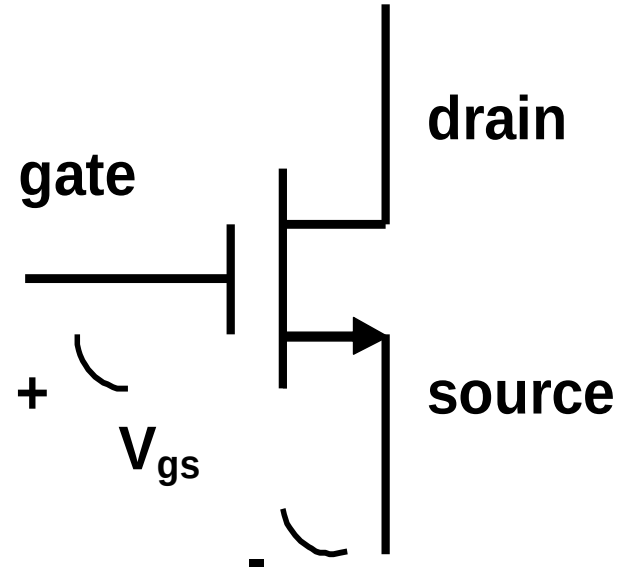

P-Channel MOS (PMOS) Transistor

- ***PMOS*** operation similar to ***NMOS***, but ***drain*** is usually at a *lower* voltage than the ***source***.

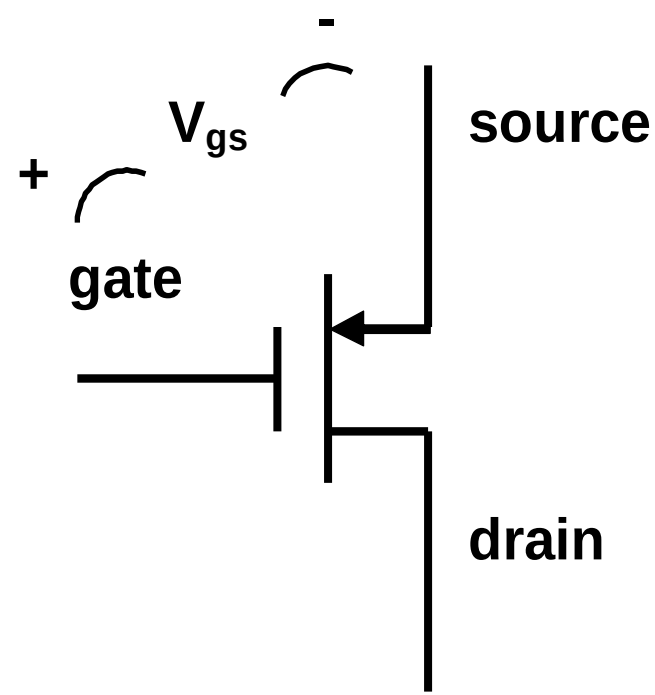

- **Notation**:
  - V_{gs} = voltage from ***source*** to ***gate***
  - R_{ds} = resistance from ***source*** to ***drain***
- **How it works**:
  - $V_{gs} \leq 0$ (usually).
  - If $V_{gs} = 0$, then R_{ds} will be very high (so, *no output*).
  - If voltage on the ***gate*** is decreased (i.e., decrease on V_{gs}), then R_{ds} decreases (so, *there is an output*).

CMOS Inverter

- **CMOS inverter circuit**: the simplest CMOS circuit, requires only one each of a PMOS and an NMOS.
- ***Functional behaviour***:

V_{IN}	Q1	Q2	V_{OUT}
0V (L)	off	on	5V
5V (H)	on	off	0V

- ***Logic symbol***:

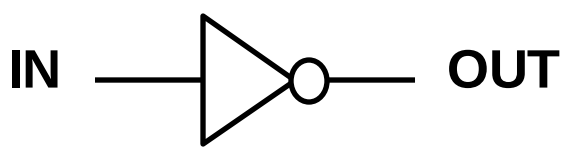

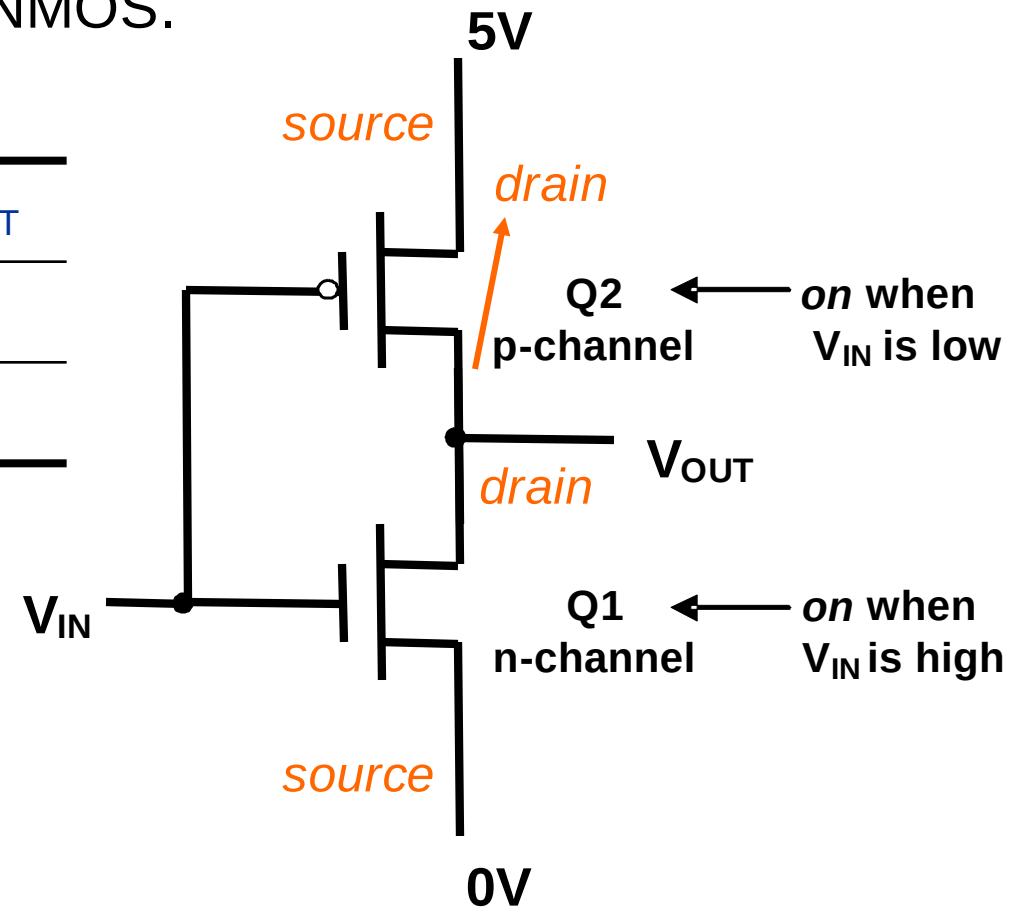

CMOS 2-Input NAND

- **CMOS NAND circuit**: a *k*-input gate uses both *k* PMOS and *k* NMOS transistors.
- ***Functional behaviour***:

A	B	Q1	Q2	Q3	Q4	Z
L	L	off	on	off	on	H
L	H	off	on	on	off	H
H	L	on	off	off	on	H
H	H	on	off	on	off	L

- ***Logic symbol***:

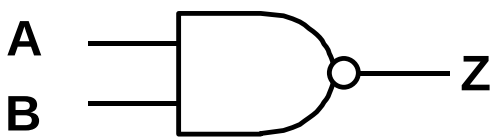

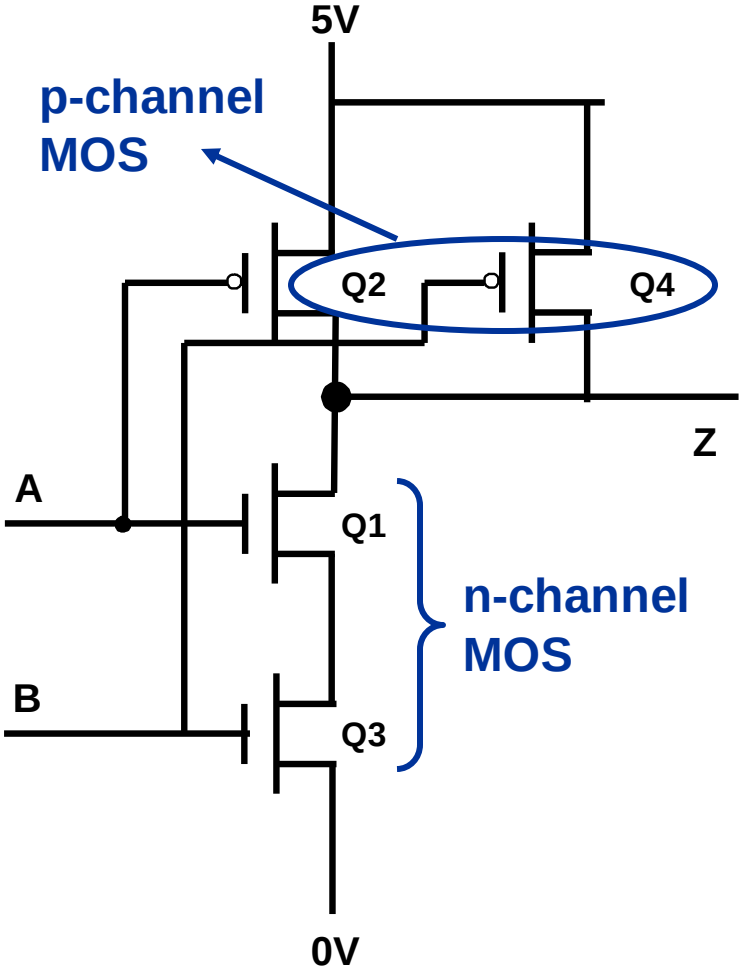

CMOS 2-Input NOR

- **CMOS NOR circuit**: a *k*-input gate uses both *k* PMOS and *k* NMOS transistors.
- ***Functional behaviour***:

A	B	Q1	Q2	Q3	Q4	Z
L	L	off	on	off	on	H
L	H	off	on	on	off	L
H	L	on	off	off	on	L
H	H	on	off	on	off	L

- ***Logic symbol***:

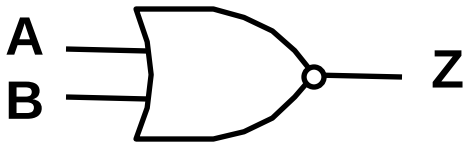

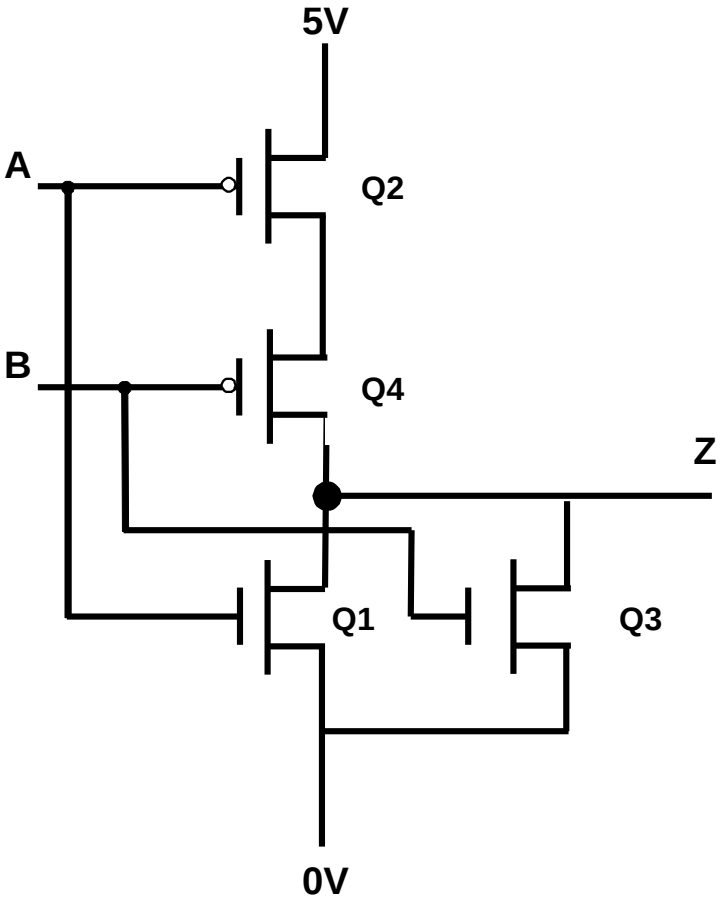

CMOS Electrical Properties

- The electrical behaviour of a CMOS gate can be characterised by its *electrical properties*. They include, apart from *logic voltage levels*:
  - *Noise margins* → How much noise it takes to corrupt a worst-case output voltage into a value that can not be recognised by an input.
  - *Fanout* → Number of inputs that the gate can drive/feed without exceeding its worst-case specifications.
  - *Speed (propagation delay)* → Time necessary for a change in the input signal to result in a change to the output signal.
  - *Power consumption* → Most CMOS circuits have low *static power dissipation*.

Dilemma faced in electronic design – increasing the *speed* (i.e., decreasing the *propagation delay*) typically results in higher *power dissipation*, and vice versa.